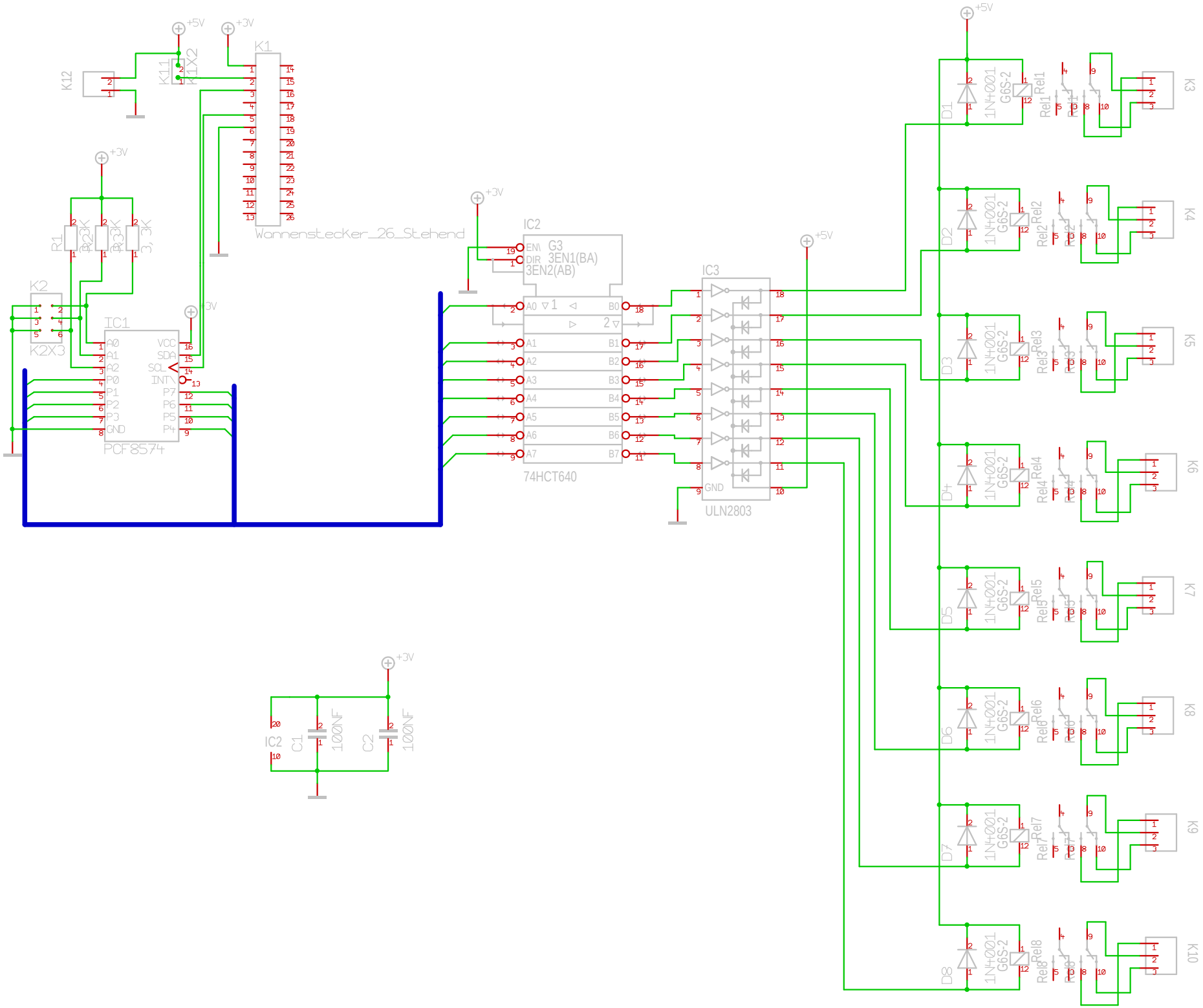
K1
Wannenstecker_26_Stehend
K11
K1X2
K12
K2
K2X3
R1
R2
R3
3,3K
IC1
PCF8574
IC2
G3
3EN1(BA)
3EN2(AB)
74HCT640
IC3
ULN2803
C1
C2
100NF
+5V
+3V
1N4001
G6S-2
Rel1
Rel2
Rel3
Rel4
Rel5
Rel6
Rel7
Rel8
D1
D2
D3
D4
D5
D6
D7
D8
K3
K4
K5
K6
K7
K8
K9
K10