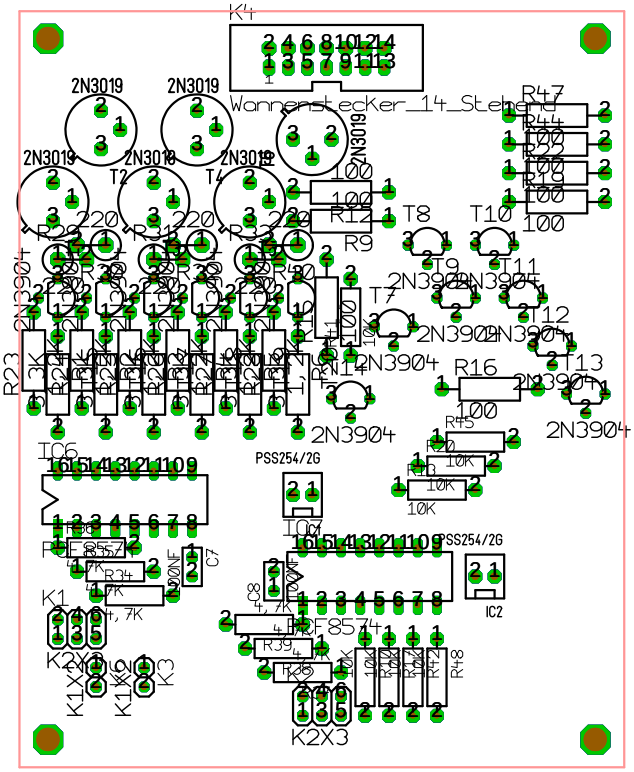
K4
Wannenstecker_14_Stehend
2N3019
T2
T4
R47
R44
R22
R19
100
R12
R9
T8
T10
T9
T11
T7
T12
T13
2N3904
R16
R45
R20
10K
PSS254/2G
IC1
IC2
PCF8574
R34
C7
C8
R39
R40
K1
K2X3
K1X3
K1X6
K3